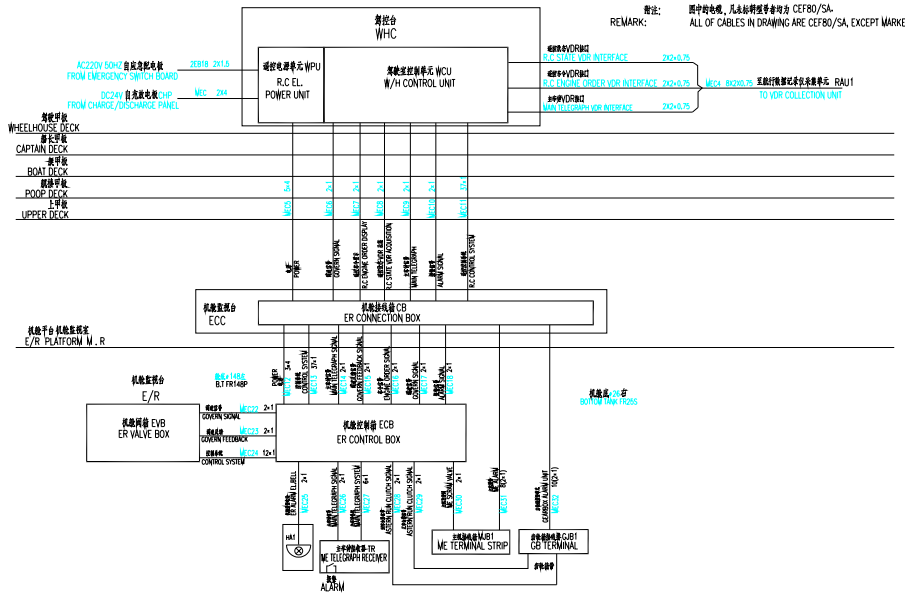

附注: 图中的电缆，凡未标明型号者均为 CEF80/SA.
REMARK: ALL OF CABLES IN DRAWING ARE CEF80/SA, EXCEPT MARKED SPECIALLY.

序号 NO.	符号和代号 SYMBOL	名称 NAME	型号和规格 TYPE AND STANDARD	数量 QTY.	附注 REMARKS
10					
9	HA1	机舱报警电铃 ER ALARM EL.BELL		1	船厂供应 SUPPLIED BY D.Y
8	GJB1	应急接线端子 GB TERMINAL		1	船厂供应 SUPPLIED BY D.Y
7	MJB1	主机接线端子 ME TERMINAL STRIP		1	船厂供应 SUPPLIED BY D.Y
6	TR	主车钟接收器 ME TELEGRAPH RECEIVER		1	成套供应 SUPPLIED IN SET
5	EVB	机舱阀箱 ER VALVE BOX		1	
4	ECB	机舱控制箱 ER CONTROL BOX		1	
3	CB	机舱接线箱 ER CONNECTION BOX		1	
2	WPU	遥控电源单元 R.C EL. POWER UNIT		1	
1	WCU	驾驶室控制单元 W/H CONTROL UNIT		1	

NO.	MODIFICATION	SIGN	DATE
	DESIGNED		
	CHECKED		
	CHE. OF STD.		
	APPROVED		
	DATE		

8DKM

主机遥控系统图
SYSTEM DIAGRAM OF REMOTE CONTROL OF M/E

技术设计
TECHNICAL DESIGN

DRAWING NO.

PAGE	WEIGHT	SCALE
1 / 2	~ kg	

工程编号
WORKS NO.

河南光彩电器有限公司
Henan Guangcai Electric Co.,ltd.

AREA: 0.1875 m²

SIGN

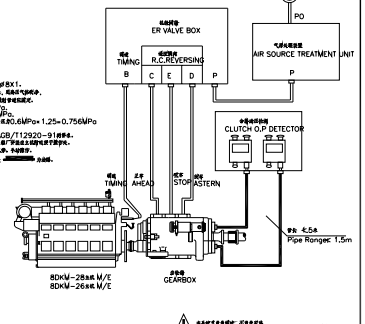

技术要求
1. 管线按图纸安装连接。
2. 管线选用无缝拉制紫铜管8×1。
3. 管线弯曲部分需要退火处理，弯曲半径要规整。
管线不得有明显凹瘪，管线弯曲处圆滑。
4. 管线吹扫干净后可通入1MPa。
5. 测试压力应为0.6MPa。
6. 管线电源取自，气源压力0.6MPa×1.25=0.756MPa
气源处理单元可承受。
7. 管线的管路布置应满足GB/T12920-91的要求。
8. 在施工前，应检查船舶上厂房应上的电气设备。
9. 本图纸不得无，修改，和删除。
10. <——>为气体；<■■■■>为油路。

注意：本图纸不参与安装调试，不参与厂房
ONLY DEBUGGING, NOT ON DUTY OF MOUNTING

TECHNICAL DEMANDS:
1. Pipeline Lays According To The Requirement Of Diagram.
2. Pipeline Adopts Seamless Drawn Copper Pipe 8×1.
3. Pipeline Be Requested Hasn't Oxide Skin,Before It Is Connected With Device, Should Be Cleaning With Acid,and Blasting Clearly With High Pressure Gas.While It Lays Should Be Fixed.
4. Be Required The Dock Yard To Supply 1MPa Air Source.
5. The Practical Application Control Pressure Is 0.6MPa.
6. After It Is Connected Firmly, Should Check Whether It Leaks With 0.6MPa×1.25=0.756MPa Air.
7. The layout of piping should comply with the GB/T12920-91 standard.
8. E/R Control Box & E/R Valve Box Intal On The M/E Local Side By the Shipyard, The Place Which Is Easy To Operate.
9. This System Could Be Realized:Remote Control, Local Control & Manual Operation.
10. <——> Is Gas Pipe; <■■■■> Is Oil Pipe.

NO.	MODIFICATION	SIGN	DATA
	DESIGNED		
	CHECKED		
	CHE.OF STD		
	APPROVED		
	DATE		

8DKM

气控管路连接图
AIR CONTROL PIPELINE CONNECTION DIAGRAM

施工设计
WORKING DESIGN

DRAWING NO.

PAGE	WEIGHT	SCALE
2 / 2	~ kg	

工程编号
WORKS NO.

河南光彩电器有限公司
Henan Guangcai Electric Co.,ltd.

AREA: 0.0625 m²